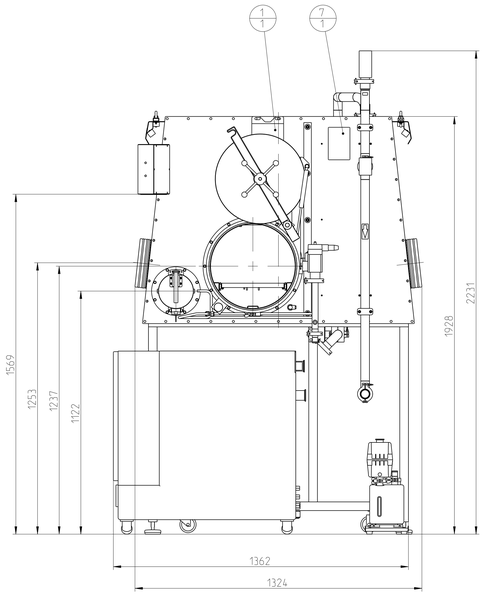

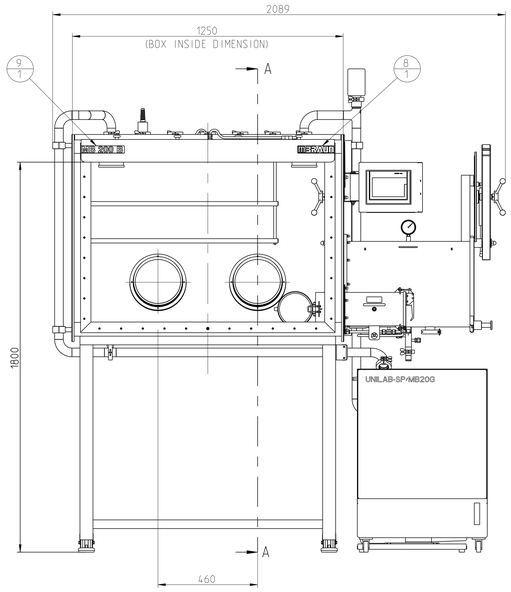

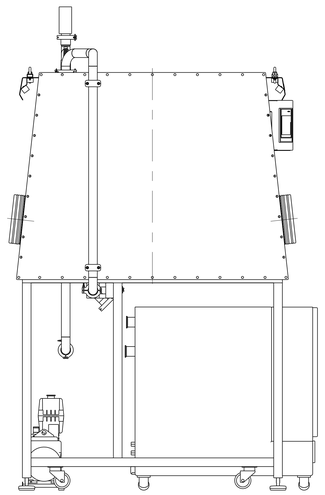

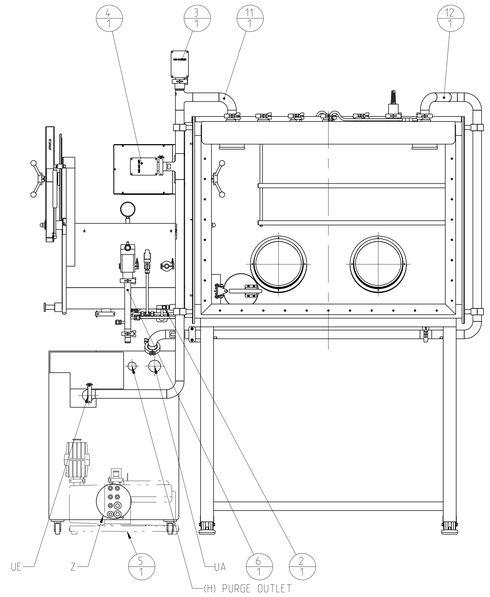

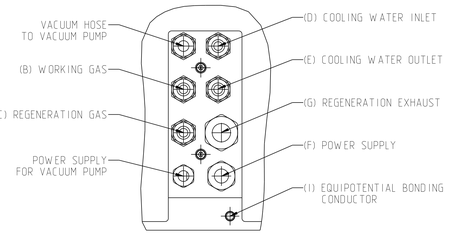

X
1:2
PURIFIER CONNECTION PANEL

PURIFIER CONNECTION LEGEND MB20G/MB200G/Unilab

	DESIGNATION	MEDIUM	CONNECTION VALUE	CONNECTION	HEIGHT ABOVE FLOOR (mm)
B	WORKING GAS	N2	6 bar	SWAGELOK 10mm	170
C	REGENERATION GAS	N2/H2	0.3-0.5 bar	SWAGELOK 10mm	130
D	COOLING WATER INLET		2bar (2-5L/min)	SWAGELOK 10mm	210
E	COOLING WATER OUTLET		DEPRESSURIZED	SWAGELOK 10mm	170
F	POWER SUPPLY		L/N/PE 230V 50-60Hz 8A fla		100
	CUSTOMER FUSE		16A gG		
G	REGENERATION OUTLET/EXHAUST		DEPRESSURIZED	TUBE Ø9x3	130
H	PURGE OUTLET			DN 40 ISO-KF	776
I	EQUIPOTENTIAL BONDING CONDUCTOR			10mm²	56
UE	CIRCULATION INLET			DN 40 ISO-KF	710
UA	CIRCULATION OUTLET			DN 40 ISO-KF	776

FOR DETAILS REGARDING THE REQUIRED SPECIFICATION OF ALL MEDIA PLEASE REFER TO THE CORRESPONDING CHAPTER OF OUR USER MANUAL.

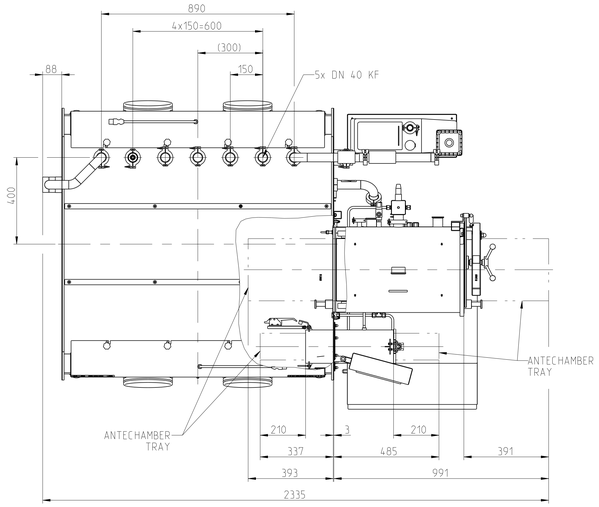

A-A

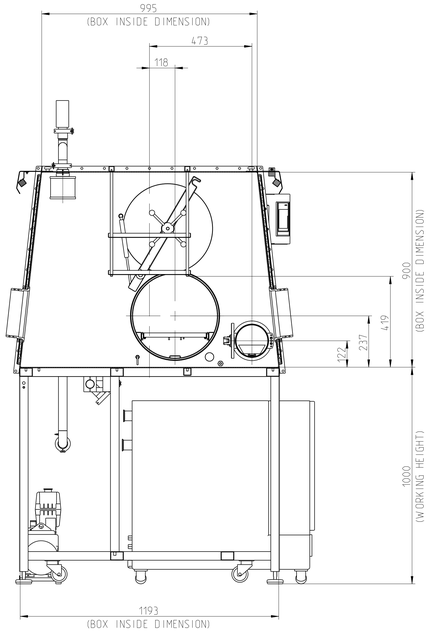

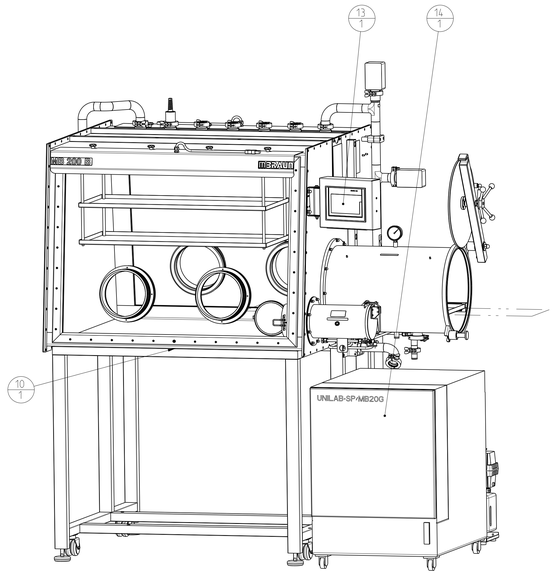

- SYSTEM IS SHOWN WITH OPTIONAL EQUIPMENT
- LOADING OF THE REACTOR SEE DRAWING 9002043

Pos./ Item	Teile-Nr./ Part No.	Benennung/ Description	Werkstoff/ Material	Rohteil/ Mat.Profile	Anz./ Qty.	Einh./ Unit
14	7133013	Gasreinigung KPL UnilabSP/MB20G-BS-ECO . SUB-ASSY. GAS PURIFIER. UNILAB SP-MB200-AM-ECO	.	.	1	Stk.
13	7100785	Bedienkonsole komplett SIMATIC TP700 . SUB-ASSY. MC PANEL. SIMATIC TP700 .		.	1	Stk.
12	7070803	Verrohrung Gaszufuhr kpl. R1200/1250-MOD . SUB-ASSY. CIRCULATION TUBING. INLET, MOD20 .		.	1	Stk.
11	7070801	Verrohrung Gasrueckauf kpl. R1200-MOD . SUB-ASSY. CIRCULATION TUBING OUTLET, MOD20 .			1	Stk.
10	7070774	Box komplett R1200/1250-390-150 . SUB-ASSY. MOD BOX. R1200/1250-390-150 .		.	1	Stk.
9	7070721	Schild Anlage MB200B . SYSTEM STICKER .	.	BL 0.5	1	Stk.
8	7070720	Schild MBRAUN Logo . LOGO, MBRAUN. SYSTEM STICKER .	.	.	1	Stk.
7	5021015	Aufkleber, Etiketten silber 150x100 LABEL, THERMAL TRANSFER SILVER 150X100	Polyester	Folie 0.05	1	Stk.
6	7070711	Vakuumverrohrung komplett AC-DN 40/25 KF SUB-ASSY. TUBING. VACUUM, MOD BOX .			1	Stk.
5	7037410	Pumpstand RV12 Labnadder/Spiralschlauch . SUB-ASSY. VACUUM PUMP. RV-12, FLOOR-MOUNT .			1	Stk.
4	6000500	H2O-Sensor MB-MO-SE1 H2O SENSOR 0-500ppm MB-MO-SE 1 .	.	.	1	Stk.
3	6000301	O2-Sensor MB-OX-SE 1 . O2 SENSOR 0-5000PPM MB-OX-SE 1 .	.	.	1	Stk.
2	4970009	Boxdrucksensor +/- 20mbar . BOX PRESSURE SENSOR +/- 20mbar .	.		1	Stk.
1	2603200	Werbedisplay 147x243x2 transparent . BILLBOARD	PMMA	.	1	Stk.

Toleranzen/Tolerancing	Oberfläche/Surface		Name	Datum	Massstab/ Scale	1:10	Werkstoff/ Material .
ISO 8015	EN ISO 1302	Bearb.	Engler	18.01.2010	Format	A0	Rohteil/ Mat.Profile .
Projektion Europa	Kantenkoeffizient	Geprüft	Grohmann	06.12.2010	Gewicht/ Weight	620.6 kg	Oberfl./ Finish .
	ISO 13715	Genehm.	Ehrhard	12.09.2016	Benennung/ Description		

Allgemeintoleranzen/General Tolerances

Laengen und Winkelmasse, Linear and Angular Form and Position

ISO 2768-mK

Fertigkeitsgrad

Schweissnahtmassen/ Welded Constructions

EN ISO 13920-BF

Inspection Dimensions

Version D.2

Status Released

Nicht massstabsgerechter Ausdruck
Print is not to scale

MBRAUN
Inertgas-Systeme GmbH
Messerschmitstr. 4
85748 Garching
+49 (089) 32 676-0
www.mbraun.com

MOD20
LAYOUT, MOD20,
R1200/1250-390-150
R1200/1250-390-150

Zeichnungs-Nr./ Drawing No. 7070773

Blatt/Sheet 1 von/of 1

The reproduction, distribution and utilization of this document as well as the communication of its contents to others without express authorization is prohibited. Offenders will be held liable for the payment of damages. All rights are reserved in the event of the grant of a patent or the registration of a utility model or design.

Weitergabe sowie Vervielfältigung dieses Dokuments, Verwertung und Mitteilung seines Inhalts sind verboten, soweit nicht ausdrücklich gestattet. Zuwiderhandlungen verpflichten zu Schadenersatz.